DocuSign Envelope ID: B92851C4-C4F7-4275-91BB-703E12BB1D00

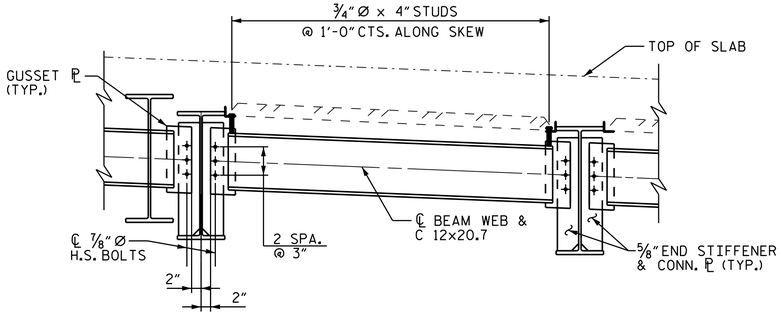

MARK D1 - END BENT DIAPHRAGM

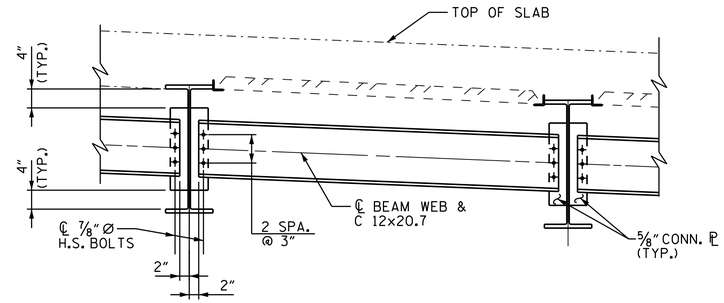

MARK D2 - INTERMEDIATE DIAPHRAGM

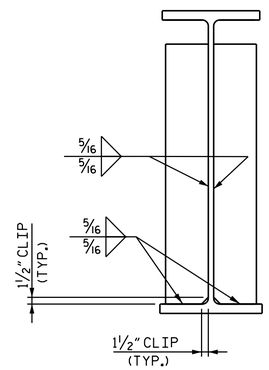

END STIFFENER

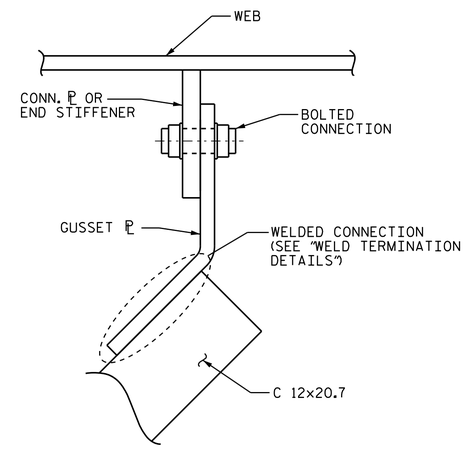

STIFFENER/CONNECTOR PLATE WELD DETAILS

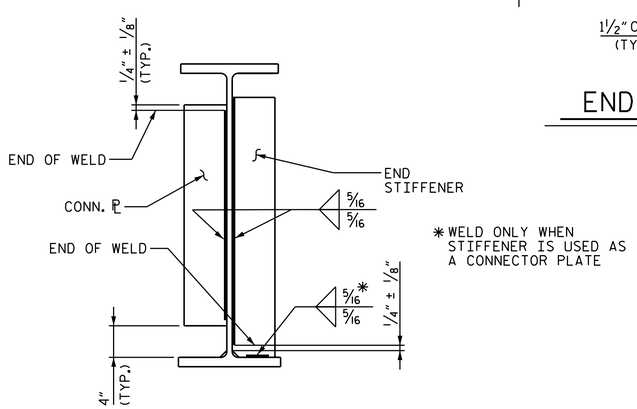

TYPICAL STIFFENER OR CONNECTOR PLATE CONNECTIONS

WELD TERMINATION DETAIL

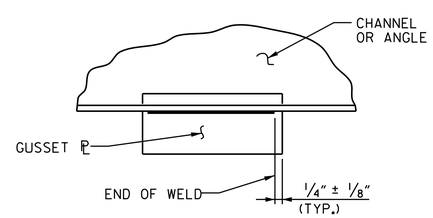

TYPICAL GUSSET PLATE CONNECTION

WELD TERMINATION DETAILS

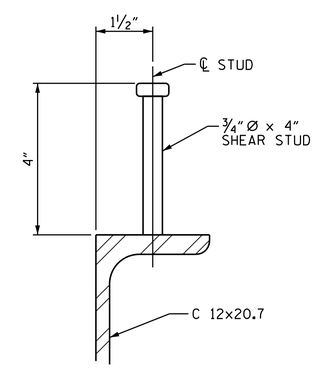

SHEAR STUD DETAIL

(TYP. EACH END BENT DIAPHRAGM)

STRUCTURAL STEEL NOTES :

ALL STRUCTURAL STEEL SHALL BE AASHTO M270 GRADE 50 AND PAINTED IN ACCORDANCE WITH SYSTEM 2 OF THE STRUCTURAL STEEL SHOP COATINGS PROGRAM AND SECTION 442-8 OF THE STANDARD SPECIFICATIONS UNLESS OTHERWISE NOTED ON THE PLANS.

ALL DIMENSIONS SHOWN ARE HORIZONTAL OR VERTICAL UNLESS OTHERWISE NOTED.

ALL FIELD CONNECTIONS TO BE 7/8" DIA. HIGH STRENGTH BOLTS UNLESS OTHERWISE NOTED.

END STIFFENERS ARE TO BE PLACED NORMAL TO THE WEB OF THE BEAM AND SHALL BE PLUMB.

TENSION ON THE ASTM A325 BOLTS SHALL BE CALIBRATED USING DIRECT TENSION INDICATOR WASHERS IN ACCORDANCE WITH ARTICLE 440-8 OF THE STANDARD SPECIFICATIONS.

ENDS OF BEAMS SHALL BE PLUMB.

THE CONTRACTOR MAY, WHEN NECESSARY, PROPOSE A SCHEME FOR AVOIDING INTERFERENCE BETWEEN METAL STAY-IN-PLACE FORM SUPPORTS OR FORMS AND BEAM STIFFENERS OR CONNECTOR PLATES. THE PROPOSAL SHALL BE INDICATED, AS APPROPRIATE, ON EITHER THE STEEL WORKING DRAWINGS OR THE METAL STAY-IN-PLACE FORM WORKING DRAWINGS.

A CHARPY V-NOTCH TEST IS REQUIRED ON ALL BEAM SECTIONS IN ACCORDANCE WITH ARTICLE 1072-9 OF THE STANDARD SPECIFICATIONS.

NUTS AND BOLTS FOR CONNECTING CLOSURE BAY DIAPHRAGMS TO CONNECTOR PLATES SHALL BE LEFT LOOSE FOR PURPOSE OF ADJUSTMENT UNTIL BOTH STAGES HAVE BEEN POURED.

END STIFFENERS ARE NOT REQUIRED ON THE OUTSIDE OF THE EXTERIOR BEAMS.

NEEDLE BEAM TYPE SUPPORTS ARE REQUIRED FOR THE OVERHANG FALSEWORK.

FABRICATORS SHALL DETAIL DIAPHRAGM MEMBERS AND CONNECTIONS FOR FULL DEAD LOAD FIT UP. BEAMS SHALL BE PLUMB AFTER THE FULL AMOUNT OF DEAD LOAD IS APPLIED.

PROJECT NO. 17BP.14.R.211
MACON COUNTY
STATION: 16+13.00-L-
SHEET 2 OF 3

NORTH CAROLINA PROFESSIONAL SEAL 20125 ENGINEER MARSHALL C. CHECK, JR.
Marshall C. Check, Jr.
5FBCC2F3A4DC413...
2/22/2021

DOCUMENT NOT CONSIDERED FINAL UNLESS ALL SIGNATURES COMPLETED

TGS ENGINEERS
804-C N. LAFAYETTE ST
SHELBY, NC 28150
PH (704) 476-0003
CORP. LICENSE NO.: C-0275

STATE OF NORTH CAROLINA
DEPARTMENT OF TRANSPORTATION
RALEIGH

SUPERSTRUCTURE

STRUCTURAL STEEL DETAILS

REVISIONS								SHEET NO.
NO.	BY:	DATE:	NO.	BY:	DATE:			S-14
1			3					TOTAL SHEETS
2			4					43

DRAWN BY :	NMW	DATE :	3/19
CHECKED BY :	MGC	DATE :	7/19
DESIGN ENGINEER OF RECORD :	MGC	DATE :	7/19